508028-01
12/2023
Supersedes 12/19

**HEALTHY CLIMATE®
MEDIA AIR CLEANER**

INSTALLATION INSTRUCTIONS AND HOMEOWNER GUIDE FOR HEALTHY CLIMATE® CABINETS MODELS HCC14-23, HCC16-28, HCC20-28, HCC10-22, HCC19-22, HCC08-21, AND HCC19-25



THIS MANUAL MUST BE LEFT WITH THE OWNER FOR FUTURE REFERENCE

Shipping and Packing List

Package 1 of 1 contains:

2 - Side panels
2 - Side rails
1 - Front panel
1 - Rear panel
1 - Door
8 - #8 screws
1 - Installation instructions
1 - Lennox logo label
1 - Warranty sheet

⚠CAUTION

Sharp Edges Hazard.
Equipment sharp edges can cause injuries.
Use protective gloves when grasping equipment edges.

⚠WARNING

Improper installation, adjustment, alteration, service or maintenance can cause property damage, personal injury or loss of life.
Installation and service must be performed by a licensed professional HVAC installer (or equivalent) or a service agency.

⚠CAUTION

Risk of equipment damage and/or high energy usage.
Dirty air filters will cause high energy usage and/or damage to the ventilation system.
Replace filters at recommended intervals.

General Information

The Healthy Climate® Media Air Cleaner is a cabinet with electrostatically charged filter media to remove airborne particles. Particle removal efficiency increases as the Minimum Efficiency Reporting Value (MERV)* rating increases. The highest removal efficiency is seen when the Healthy Climate Media Air Cleaners are equipped with Healthy Climate Carbon Clean 16 MERV 16 filters. Unlike other high efficiency air cleaners, the Healthy Climate Media Air Cleaners do not require any power source to operate.

The Healthy Climate® cabinet is shipped compact, and requires minimal assembly. The cabinet can be installed on the furnace/air handler horizontally, or vertically, at the top, or at the bottom, depending on the application (see Page 4 for application diagrams). Healthy Climate® Media Filter will last up to one year depending on conditions in the home.

The Healthy Climate Media Air Cleaner comes in seven sizes (HCC14-23, HCC16-28, HCC20-28, HCC10-22, HCC19-22, HCC08-21, and HCC19-25).

The HCC14-23 cabinet is designed to house the following filters:

- HCF14-11
- HCXF14-11
- HCF14-13
- HCF14-16
- HCXF14-16

The HCC16-28 cabinet is designed to house the following filters:

- HCF16-11
- HCXF16-11
- HCF16-13
- HCF16-16
- HCXF16-16

The HCC20-28 cabinet is designed to house the following filters:

- HCF20-11
- HCXF20-11
- HCF20-13
- HCF20-16
- HCXF20-16

The HCC10-22 cabinet is designed to house the following filters:

- HCF10-11
- HCF10-16

The HCC19-22 and HCC19-25 cabinets are designed to house the following filters:

- HCF19-11
- HCF19-16

The HCC08-21 cabinet is designed to house the following filters:

- HCF14-11
- HCXF14-11
- HCF14-13
- HCF14-16
- HCXF14-16

Healthy Climate box cabinets and filters (box or expandable media) are purchased separately.

*MERV rating is determined by testing according to ASHRAE standard 52.2.

Required Tools

The following tools are required to attach the filter cabinet to the furnace/air handler:

- Electric drill
- 1/4” (6mm) hex head tool
- Tin snips
- Screwdriver
- Rule/tape measure
- Gloves for sharp edge protection
- Foil tape

Rules for Safe Installation

1. Read this Owners Manual and Rules for Safe Operation carefully. Failure to follow these rules and instructions could cause a malfunction of filter or unsatisfactory service.
2. Follow a regular service and maintenance schedule for efficient operation.
3. Maximum static weight for cabinet - 400 lbs. (181 kg.)

Dimensions

Table 1. Dimensions - inches (mm)

Model#	X	Y	Y1	Z	Z1
HCC14-23	7 (179)	21-1/4 (540)	18-3/4 (476)	23 (584)	18-1/2 (470)
HCC16-28	7 (179)	17-1/4 (438)	14-3/4 (375)	28-1/2 (724)	24 (610)
HCC20-28	7 (179)	21 (533)	18-1/2 (470)	28-1/2 (724)	24 (610)
HCC10-22	7 (179)	18-1/2 (470)	16 (406)	22-5/8 (575)	18-3/8 (467)
HCC19-22	7 (179)	21-1/2 (546)	19 (483)	22-3/4 (578)	18-1/2 (470)
HCC08-21	7 (179)	21-1/4 (540)	18-3/4 (476)	21-1/8 (537)	17 (432)
HCC19-25	7 (179)	21-1/4 (540)	18-3/4 (476)	25-1/8 (638)	20-7/8 (530)
Dimensions subject to change without notice.					

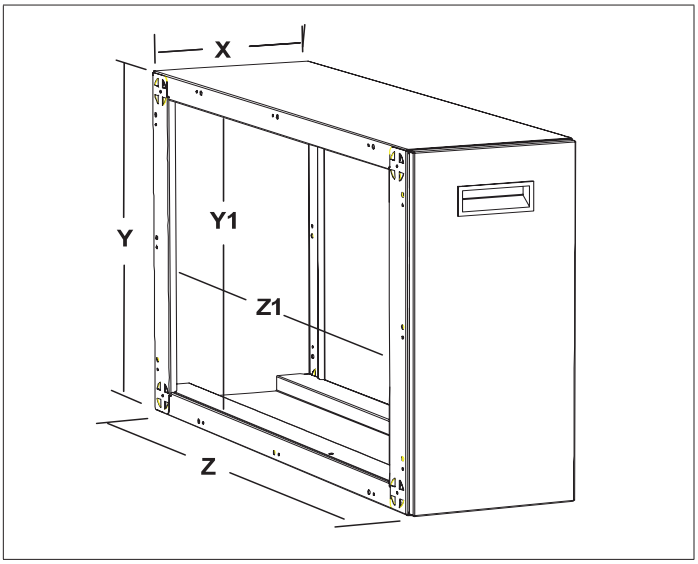

Figure 1. Dimensions

Unpack the Cabinet

The cabinet must be unpacked and assembled prior to use. Refer to Figure 2 to ensure all the necessary components are included before assembling.

Component List

A 1 - Rear Frame
B 1 - Front Frame
C 1 - Door
D 2 - Side Rail
E 2 - Side Panel

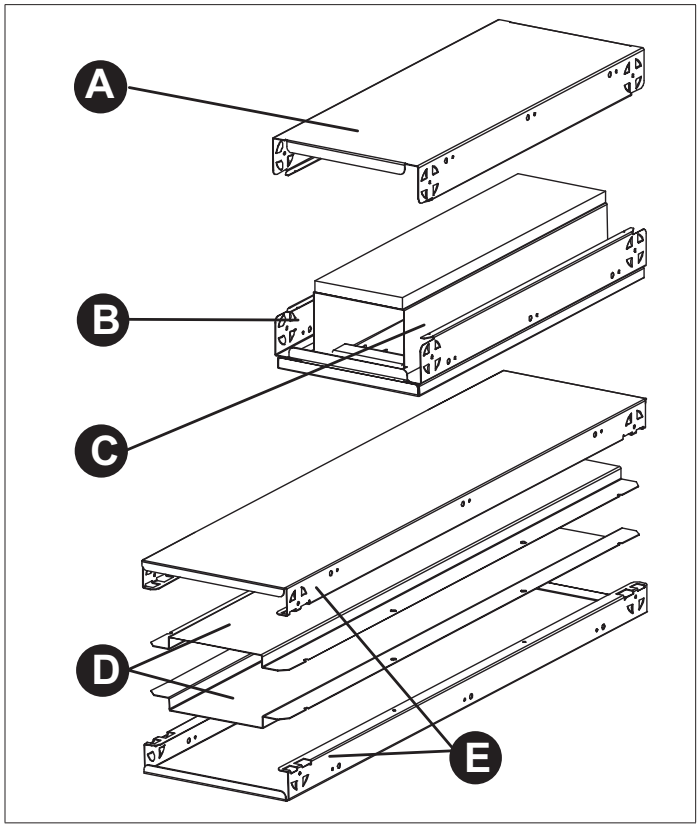

Figure 2. Unpack the Cabinet

Assemble the Cabinet

The cabinet sections are designed to lock together. Align the edges as shown in Figure 3 on page 3. It may be necessary to apply force to snap the tight pieces together.

1. Remove front frame B from door C.
2. Place side panel E on a firm surface. Align and insert front frame B into one end of side panel E (see Figure 3 on page 3). Firmly press down until each corner has snapped into place.
3. Align and insert rear frame A into side panel E (see Figure 4 on page 3).
4. Align and insert remaining side panel E into front frame B and rear frame A. Firmly press down until each corner has snapped into place (see Figure 5 on page 3).

NOTE: *Side rails (D) are attached to the cabinet after the cabinet is installed on the Furnace/Air Handler (see Figure 14 on page 6).*

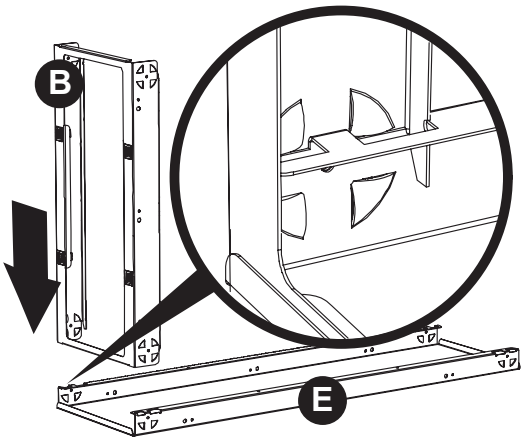

Snap front frame B into side panel E. Parts interlock as shown in detail illustration.

Figure 3. Assemble Front Frame (B) to Side Panel (E)

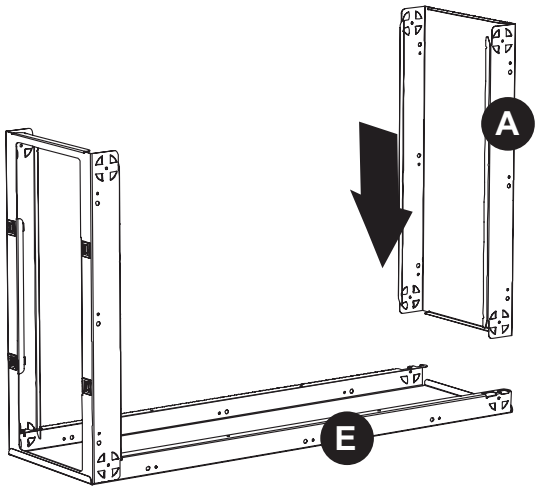

Snap rear frame A into side panel E.

Figure 4. Assemble Rear Frame (A) to Side Panel (E)

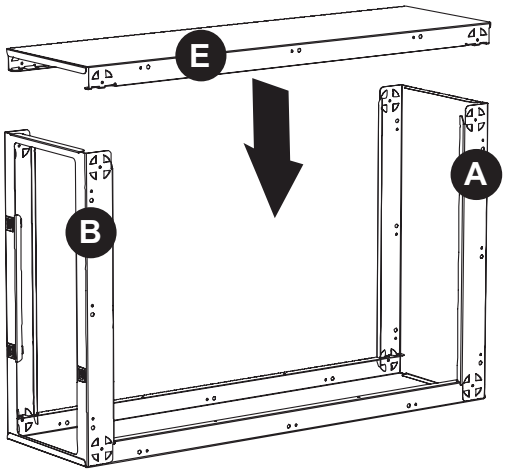

Snap remaining side panel E into front frame B and rear frame A.

Figure 5. Assemble Remaining Side Panel (E)

Use of Healthy Climate Media Air Cleaner for Construction Filtration

Healthy Climate Media Air Cleaners may be used for filtering heated or cooled air of buildings or structures under construction if the following conditions are met to ensure proper operation:

DO NOT USE THE UNIT FOR CONSTRUCTION FILTRATION UNLESS ALL OF THE FOLLOWING CRITERIA ARE MET:

- Cabinet and furnace or air handler must be in their final location. The vent system must be permanently installed per these installation instructions.
- Refer to furnace or air handler installation instructions for any additional construction use criteria. All furnace or air handler construction use criteria must also be met.
- Supply and return air ducts must be provided and sealed to the furnace or air handler. Return air must be terminated outside of the space where the furnace or air handler is installed.
- Healthy Climate MERV 11 or greater air filters must be installed in the system and must be regularly inspected and maintained during construction. Filters must be changes when operating more than 0.1" WC static pressure over initial static pressure at operating airflow.
- Air filters must be replaced upon construction completion.

FILTER LIFE MAY BE SHORTENED WHEN USED IN STRUCTURES UNDER CONSTRUCTION. FILTER MUST BE REPLACED UPON CONSTRUCTION COMPLETION.

EQUIPMENT MAY EXPERIENCE PREMATURE COMPONENT FAILURE AS A RESULT OF FAILURE TO FOLLOW THE THESE INSTALLATION INSTRUCTIONS.

FAILURE TO FOLLOW THIS INSTALLATION INSTRUCTIONS VOIDS THE MANUFACTURER'S EQUIPMENT LIMITED WARRANTY. LENNOX DISCLAIMS ALL LIABILITY IN CONNECTION WITH INSTALLER'S FAILURE TO FOLLOW THE ABOVE INSTALLATION INSTRUCTIONS.

NOTWITHSTANDING THE FOREGOING, INSTALLER IS RESPONSIBLE FOR CONFIRMING THAT THE USE OF CONSTRUCTION HEAT OR COOLING IS CONSISTENT WITH THE POLICIES AND CODES OF ALL REGULATING ENTITIES.

ALL SUCH POLICIES AND CODES MUST BE ADHERED TO.

Applications

Up-flow Furnace/Air Handler

Cabinet is installed horizontally beneath the furnace/air handler. Return air enters from the bottom (see Figure 6).

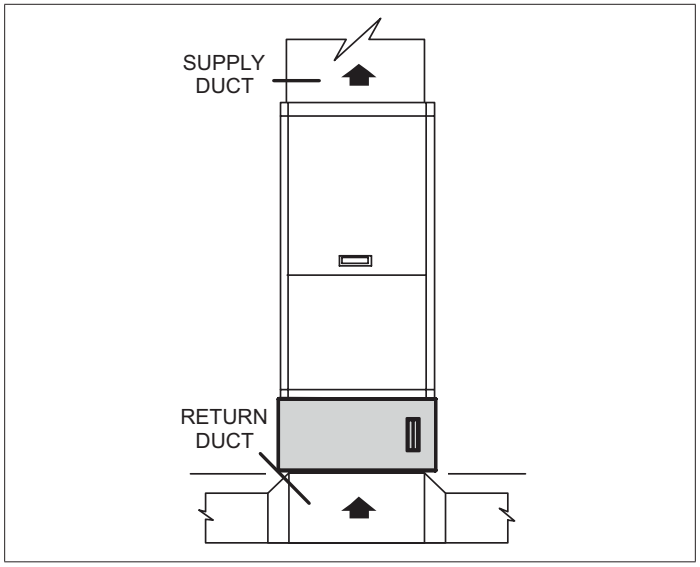

Figure 6. Up-flow Furnace/Air Handler

Down-flow Furnace/Air Handler

Cabinet is installed horizontally in the return air duct just above the furnace/air handler.

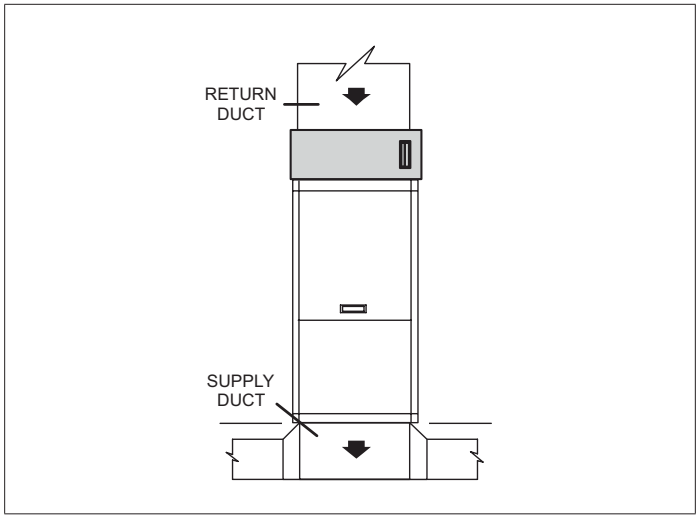

Figure 7. Down-flow Furnace/Air Handler

Up-flow Furnace (up to 4 ton application)

Cabinet is installed vertically and return air enters the furnace side inlet.

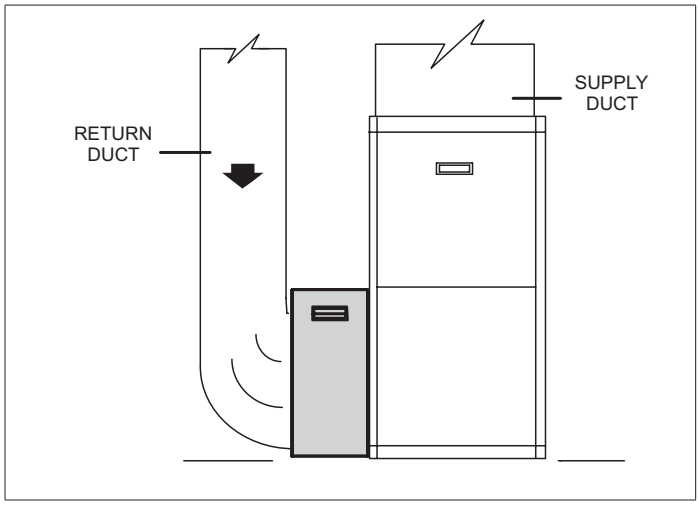

Figure 8. Up-flow Furnace (up to 4 ton)

Up-flow Furnace (5 ton application)

Option 1 - Install Return air base, part numbers 98M60, 98M58. HCC20-28 Cabinet is installed vertically and return air enters the furnace side inlet.

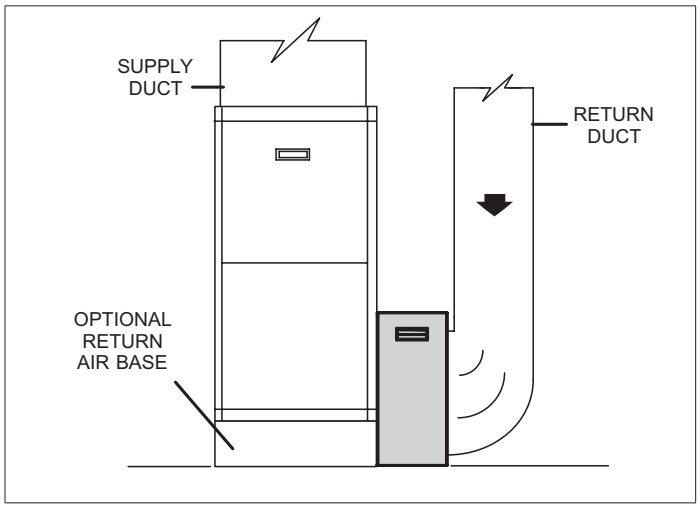

Figure 9. Up-flow Furnace (5 ton, Option 1)

Option 2 - Over cut top edge of side return opening by 1" to 15" x 23". HCC20-28 Cabinet is installed vertically and return air enters the furnace side inlet.

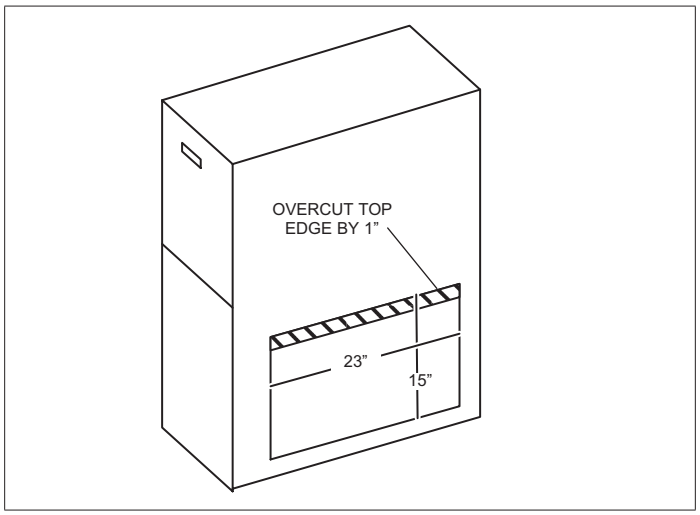

Figure 10. Up-flow Furnace (5 ton, Option 2)

Horizontal Furnace

Cabinet is installed vertically in the return air duct near the furnace.

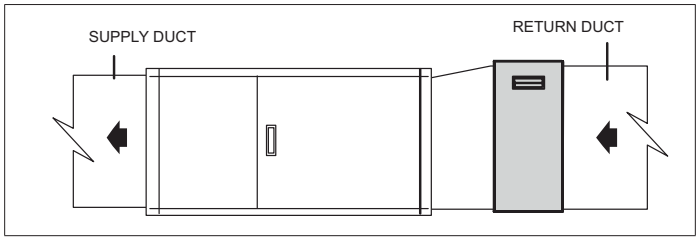

Figure 11. Horizontal Furnace

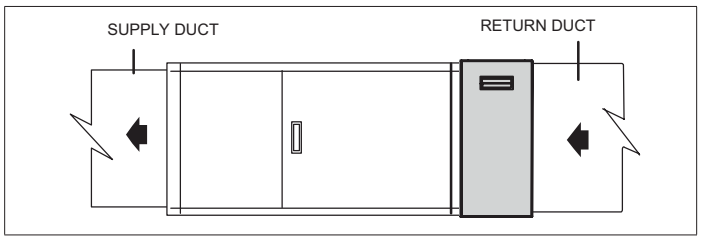

Figure 12. Horizontal Air Handler

Installation

Cabinet Installation

The following is a typical installation of the cabinet with an up-flow furnace (see Figure 8 on page 5).

1. Position the cabinet alongside the furnace with the access door opening facing outward.
2. Align the cabinet opening with the opening on the furnace. For 5 ton application, use option 1 or 2 (see Figure 9 on page 5 and Figure 10 on page 5).
3. Secure the cabinet to the furnace using sheet metal screws in the pre-drilled cabinet mounting holes (see Figure 13).
4. Use a butt joint to attach the duct to the upstream side of the cabinet.

NOTE: *If necessary, use sheet metal turning vanes to improve air movement through an elbow in the duct.*

5. Connect the next section of the duct. If necessary, use a properly sized wooden block to support a duct elbow.
6. Use foil tape to seal all duct joints. This prevents dust from entering the air stream.
7. Insert side rails (D) into the cabinet and use the provided screws to secure them to the cabinet at both the top and bottom (see Figure 14).
8. Slide the filter into the rail and secure the cabinet door (see Figure 15).

⚠WARNING



Risk of Carbon Monoxide poisoning. Can cause injury or death. Do not operate without Filter Cabinet door in place. Operation of this equipment without the Filter Cabinet door in place may cause exhaust fumes to be drawn into occupied spaces.

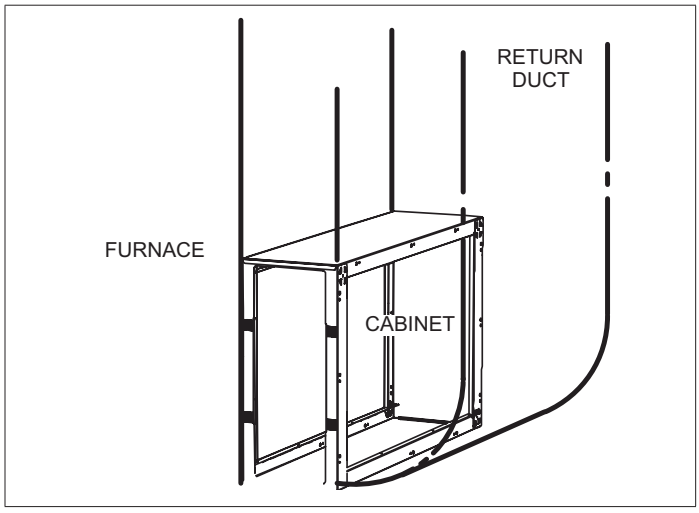

Figure 13. Attach Cabinet to Furnace and Duct

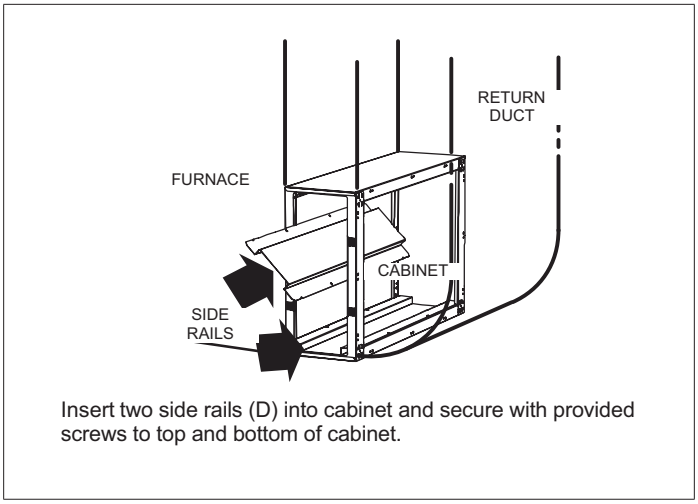

Insert two side rails (D) into cabinet and secure with provided screws to top and bottom of cabinet.

Figure 14. Install Side Rails

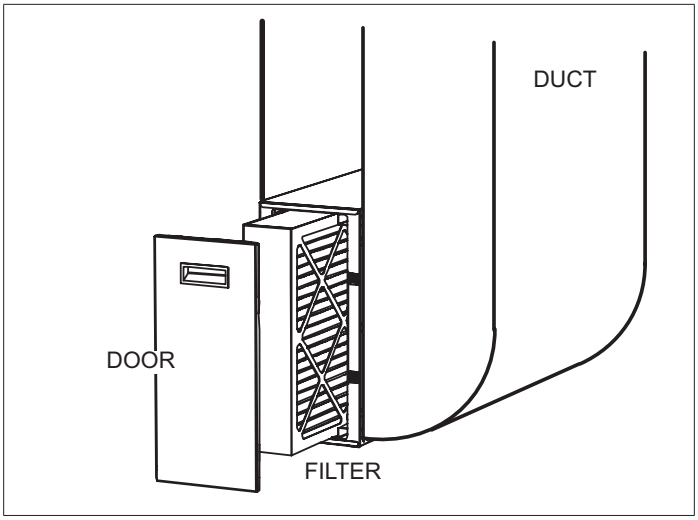

Figure 15. Insert Filter and Attach Door

