INDOOR AIR QUALITY PRODUCTS
KITS AND ACCESSORIES

506038-01
8/2018
Supersedes 9/2017

HEALTHY CLIMATE® GERMICIDAL LIGHT

INSTALLATION & HOMEOWNERS INSTRUCTIONS FOR HEALTHY CLIMATE® GERMICIDAL LIGHT – MODELS UVC-24V, UVC41W-S & UVC-41W-D

THESE INSTRUCTIONS MUST BE LEFT WITH THE HOMEOWNER FOR FUTURE REFERENCE

General

The Healthy Climate® germicidal light emits ultraviolet (UVC) energy that has been proven effective in reducing microbial life forms (viruses, bacteria, yeasts, and molds) in the air.

UVC germicidal lamps greatly reduce the growth and proliferation of mold and other bio-aerosols (bacteria and viruses) on illuminated surfaces.

Germicidal lamps are NOT intended to be used for removal of active mold growth. Existing mold growth must be appropriately removed PRIOR to installation of the germicidal lamp.

Models covered by this document include UVC-24V, UVC-41W-S and UVC-41W-D.

Shipping and Packing List

Contents

1 - Healthy Climate® germicidal light consisting of:
- 1 - UVC lamp (2 lamps for model UVC-41W-D)
- 1 - Enhanced ballast
- 2 - 8-32 x 1/2” sheet metal screws for enhanced ballast
- 1 - Lamp holder assembly (2 lamp holders for model UVC-41W-D)
- 3 - 6-20 x 1/2” sheet metal screws per lamp holder assembly
- 1 - Mounting template

2 - UVC danger labels

1 - Installation instructions

1 - Warranty sheet

1 - Product registration card

UVC LAMP INSTALLED

☐ UVC-24

☐ UVC-41W-S

☐ UVC-41W-D

⚠ WARNING

Improper installation, adjustment, alteration, service or maintenance can cause property damage, personal injury or loss of life. Installation and service must be performed by a licensed professional HVAC installer or equivalent, service agency, or the gas supplier.

⚠ CAUTION

As with any mechanical equipment, contact with sharp sheet metal edges can result in personal injury. Take care while handling this equipment and wear gloves and protective clothing.

Required Tools and Supplies

- Drill
- Phillips screw bit or screwdriver
- 1" (25mm) hole cutter
- Cotton cloth and gloves

Part No.	Replacement Part Description
Y0390	UVC lamp for UVC-24V (Blue Tip)
Y0391	UVC lamp for UVC-41W-S & UVC-41W-D (Green Tip)
91W54	UVC lamp holder base (all models)
Y0392	UVC lamp holder assembly (all models)
Y0393	Enhanced ballast for UVC-24V
Y0394	Enhanced ballast for UVC-41W-S
Y0395	Enhanced ballast for UVC-41W-D
Y5171	Lamp shielding baffle
42J32	Transformer (40VA rating)

⚠ WARNING



Electric Shock Hazard! – Disconnect all power supplies before servicing.

Replace all parts and panels before operating.

Failure to do so can result in death or electrical shock.

0818
506038-01

⚠ WARNING

Potential Mold Spore Release.

Application of UVC lamps to existing mold growth can cause respiratory irritation and allergic symptoms.

Do not use UVC lamps where active mold growth exists. Remove active mold growth from surfaces prior to operation of UVC lamps.

⚠ DANGER

Ultraviolet (UVC) Radiation Hazard.

Any exposure will cause significant eye damage and may cause skin damage.

DO NOT look into UVC light source.

Access panels must be in place during appliance operation.

Dimensions/Specifications

Dimensions Model UVC-24V (X9423)	
Enhanced ballast	4.75”L x 2.25”W x 2”H (121mm x 58mm x 51mm)
Lamp	3/4””dia. x 16” length. (19mm x 406mm)
Dimensions Models UVC-41W-S (X9424) and UVC-41W-D (X9425)	
Enhanced ballast	11.75”L x 2.75”W x 1.625”H (300mm x 70mm x 42mm)
Lamp	3/4””dia. x 16” length. (19mm x 406mm)
Electrical Power Supply	
UVC-41W-S & UVC-41W-D	110V/230V Universal, 50/60 Hz
UVC-24V	24V, 50/60 Hz
Power Consumption	
UVC-41W-S	41 Watts
UVC-41W-D	82 Watts (41Watts each lamp)
UVC-24V	24 Watts (24VA required for transformer)
Lamp Operating Temperature	
ALL MODELS	-15ºF to 180ºF (-15ºC to 82ºC)
Enhanced Ballast Operating Temperature	
ALL MODELS	45ºF to 150ºF (7ºC to 65ºC)
Accessories	
ALL MODELS	Shielding Baffle (Y5171)
Power Cordage (from connector to enhanced ballast)	
ALL MODELS	6 feet length

Model UVC-24V

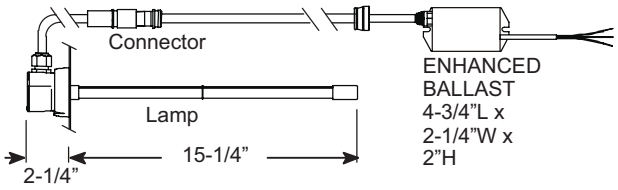

Model UVC-41W-S

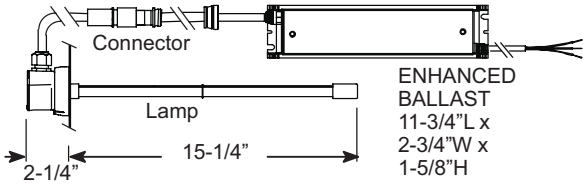

Model UVC-41W-D

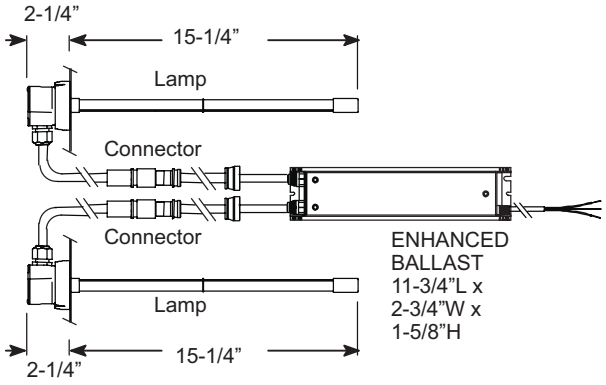

Listings:

FIFRA (Federal Insecticide Fungicide Rodenticide Act) - File No. 73316.

U.S. Patent Nos. 5,334,347, 5,817,276, 6,245,293, 6,267,924, 6,280,686, 6,313,470, 6,627,000, 6,539,727, 6,932,494, 6,550,257.

Specifications subject to change without notice.

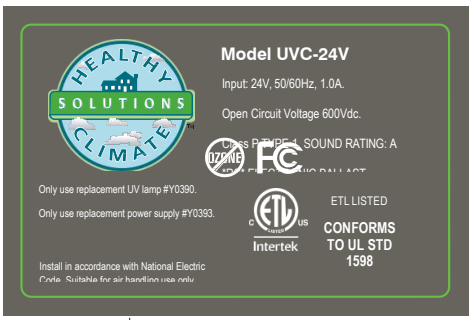

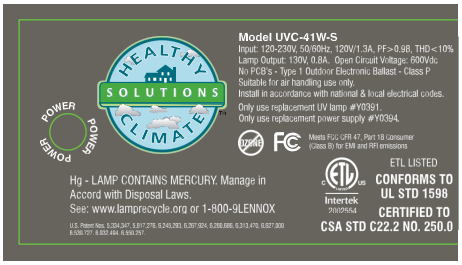

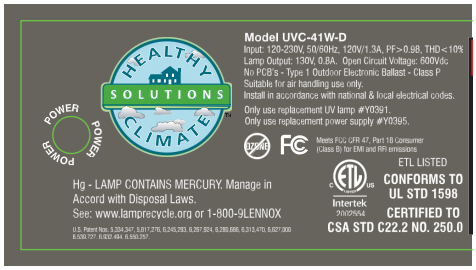

MODEL NAMEPLATES APPLIED TO THE BALLAST FOR FIELD IDENTIFICATION

Usage, Location and Other Requirements

Air Handler Size Requirements

UVC Light Model	Air Handler Size (Tonnage)
UVC-24V	1-5
UVC-41W-S	3-5
UVC-41W-D	3-5
*In UVC-41-W-D model, only one light can be installed in the delta plate.	

Selecting an Installation Location

This device has been designed to fit into a wide variety of locations. Choose a location with enough clearance to allow the UVC lamp to be removed and replaced easily. Be sure to choose a location that is easy to access for maintenance and that has an electrical power supply nearby.

See Figure 1 for preferred furnace locations; see figure 2 for preferred air handler locations.

Install the device in the return air duct, at the furnace, near the HVAC coil, or in the supply air duct. Duct depth must be at least 16" (406mm) to allow for the lamp length.

OPTIMAL POSITION FOR COIL MOUNTING

When installing the light in a coil with a knockout, use the knockout. The knockout is located in the optimal position for the UVC light (where shown in figure 1). For coils without knockouts, and depending on the space available, ALWAYS try to locate the light's mounting position as near the "optimal location" as possible.

Special Installation Notes:

- Do not install in closet return applications where light will be seen.
- Do not install a bulb in the access door or blower compartment.
- Do not install in rooftop/outdoor applications.
- Do not expose wiring or plastic parts to UVC light. Do not install device beneath a humidifier or source of water.
- If the UVC device is installed near an air filter, check with filter manufacturer for UVC resistance properties and/or use the shielding baffle to protect the air filter.
- **A shielding baffle is required for non-UVC resistant filters, which includes Healthy Climate filters.**

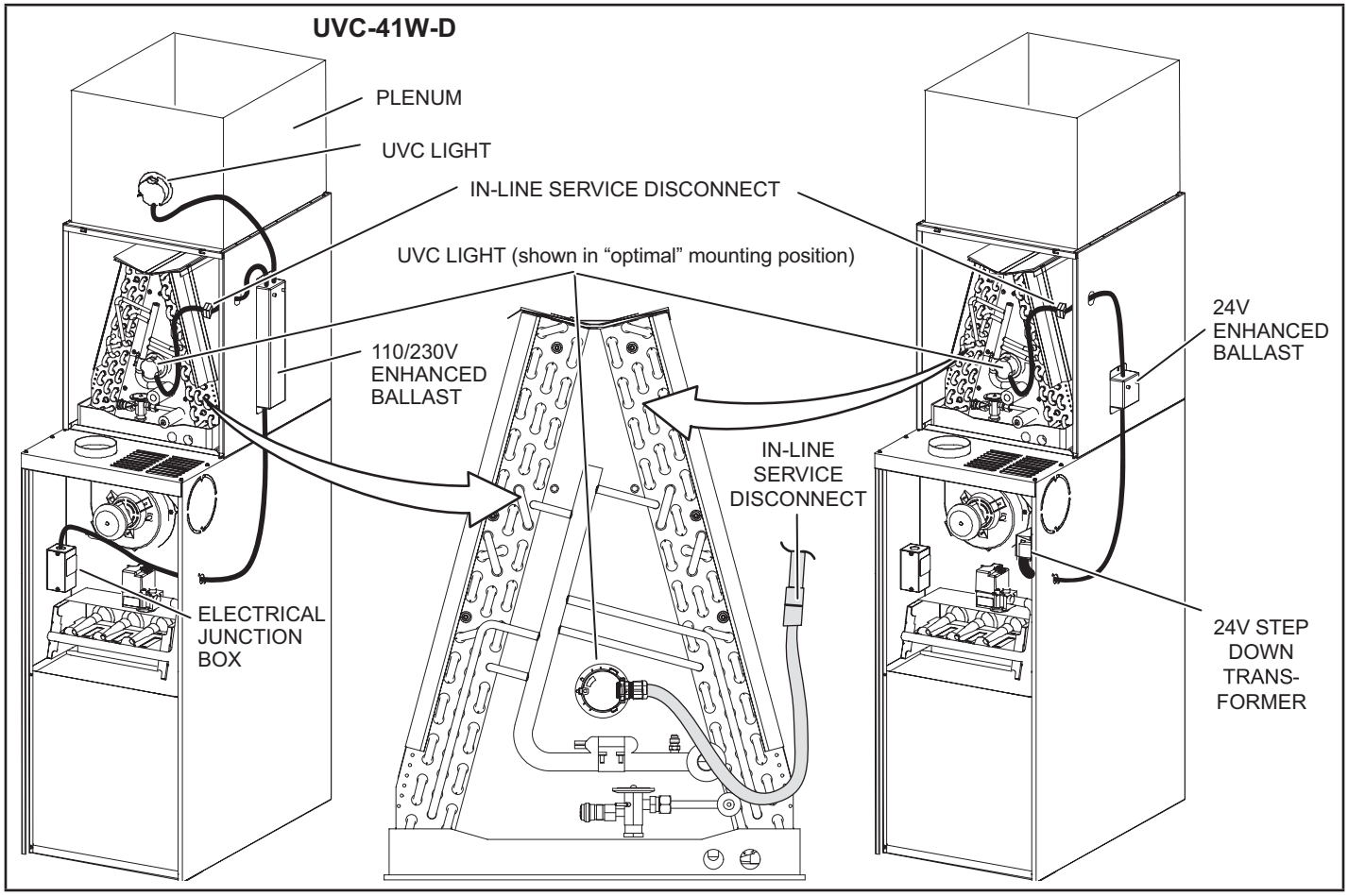

FIGURE 1. Preferred UVC Light Mounting Locations (Furnace Applications)

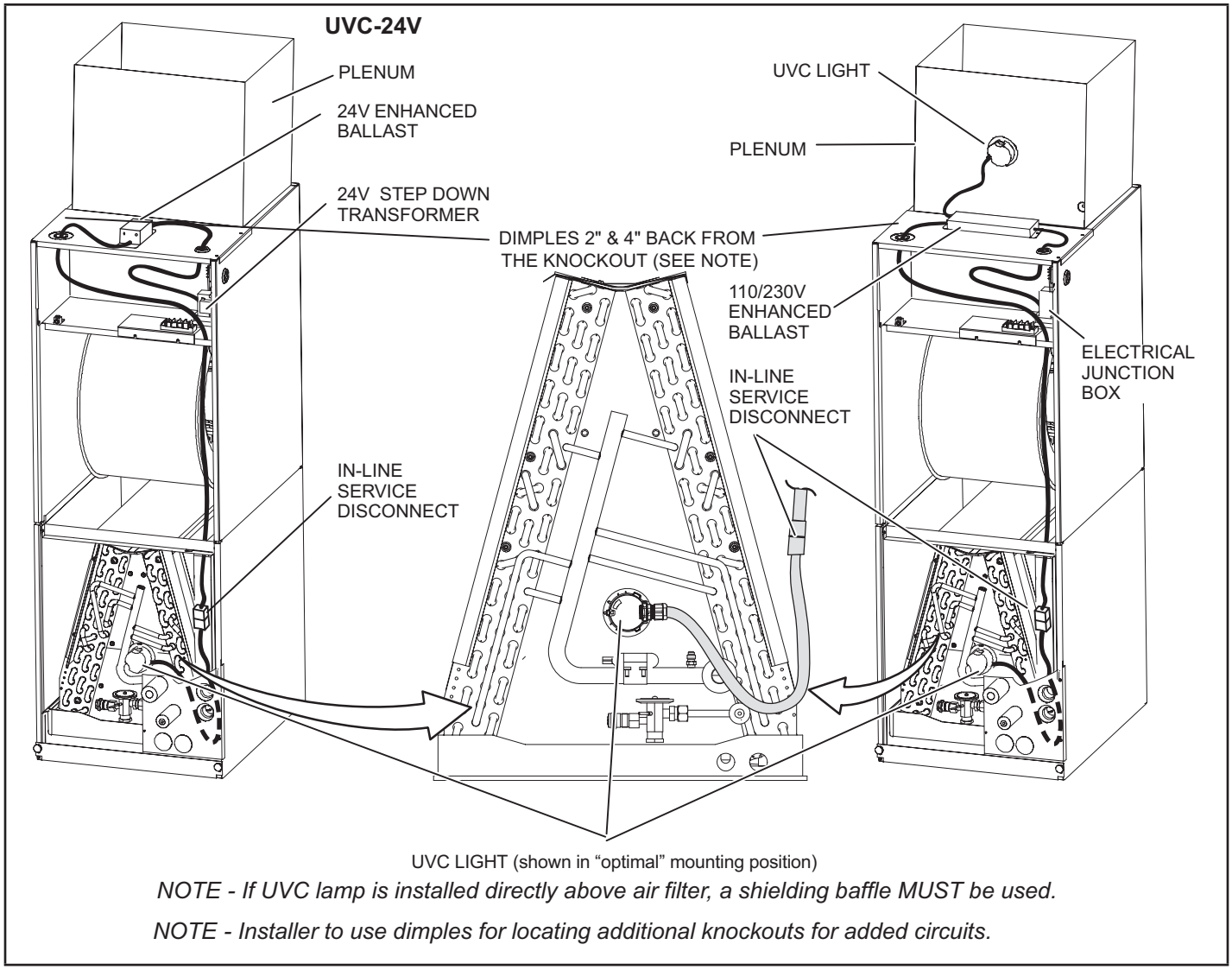

NOTE - If UVC lamp is installed directly above air filter, a shielding baffle MUST be used.

NOTE - Installer to use dimples for locating additional knockouts for added circuits.

FIGURE 2. Preferred UVC Light Mounting Locations (Air Handler Applications)

Installation

Installing the Enhanced Ballast

The enhanced ballast must be installed on a solid surface and where the LEDs are visible (see figure 1 for preferred location). Attach the enhanced ballast using included sheet metal screws (see figure 3).

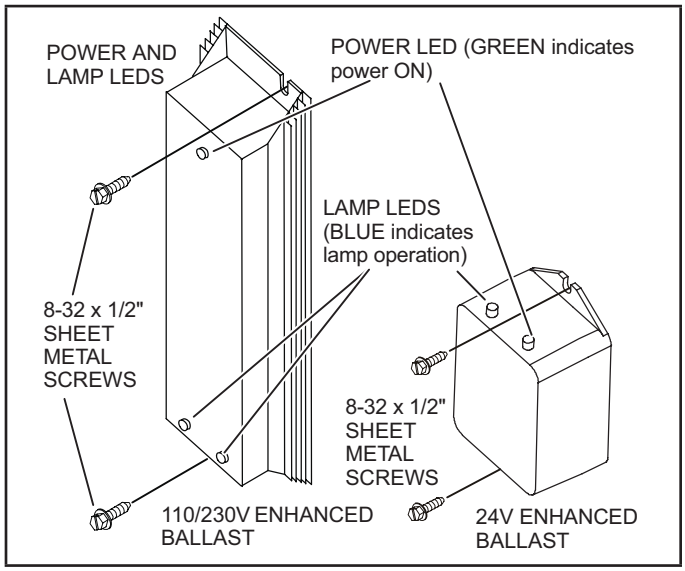

FIGURE 3. Install the Enhanced Ballast

NOTICE

The enhanced ballast must be installed in compliance with all national and local electrical and mechanical codes. Failure to do so will void warranty.

Flexible duct installation with less than 6 ft. (1.8m) clearance between the lamp and the flex duct must have a 90 degree metal elbow and 6' of metal duct installed to protect the duct from direct UVC light exposure (see figure 4).

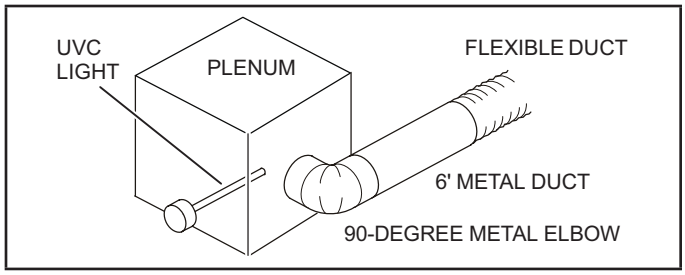

FIGURE 4. 90-Degree Elbow Installation

⚠ WARNING

Potential Risk of Fire.

Dust, lint and other debris may cause fire if allowed to come in contact with illuminated UVC lamp.

Remove any dust, lint or other debris from lamps and surrounding duct system.

⚠ CAUTION

Potential Risk of Degradation of Materials.

Potential of degraded wire insulation may cause human injury through electrical shock.

UVC light may damage plastics and rubber materials. May cause fabric discoloration.

Avoid UVC light exposure to plastic drain pans, wire insulation, flex duct or other plastic/rubber components.

Before installation, confirm that any corrosion-resistant coating (if applied to the coil) will not be negatively impacted by the UVC light exposure.

Preparation for Lamp Holder Base Installation

NOTICE

Do not damage components of the heating system or refrigerant tubing when drilling or cutting.

Coil Delta Plate Applications (Preferred)

1 - If there is a knockout hole on the coil delta plate for UVC lamp application (on some models), knock out the 1" hole for the lamp.

OR, if there is no knockout hole on the coil delta plate, use the provided template (also shown in figure 5) as a guide to identify a hole location as close as possible to the optimum delta plate location which is about 1/3 from the bottom of the coil as shown in figure 1. ***Be sure that the lamp cable will not interfere with surrounding tubing***. Be sure to allow 30 degrees rotational clearance for installing and locking the lamp holder in the base. When an appropriate location is identified, drill a 1" hole for the lamp. **DO NOT drill the mounting holes for the holder at this time!**

2 - **Skip this step if no shielding baffle is required**. When using a shielding baffle (Y5171), it must be installed in the 1" hole prior to continuing this procedure. See the procedure described in figure 6.

3 - Align the template over the 1" hole. (If the baffle is used, this procedure will drill holes through both the baffle and the delta plate.) Use the template to mark three hole locations on the mounting surface. Remove the template and drill three 3/32" pilot holes for mounting screws.

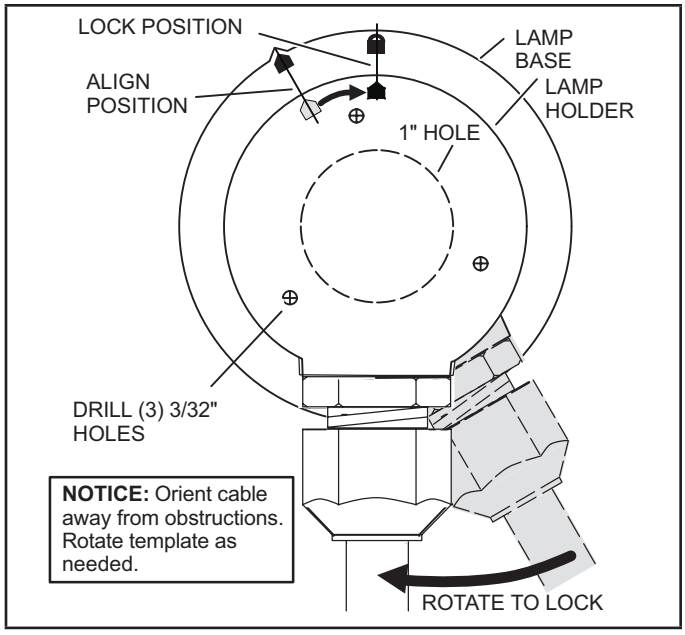

FIGURE 5. Using the Mounting Template

Plenum Applications

NOTE - Duct board plenum installations are not recommended.

1 - Place the mounting template label in the desired location. Using the template as a guide, drill a 1" hole for the lamp.

2 - **Skip this step if no shielding baffle is required.** When using a shielding baffle (Y5171), it must be installed in the 1" hole prior to continuing this procedure. See the procedure described in figure 6.

3 - Align the template over the 1" hole. (If the baffle is used, this procedure will drill holes through both the baffle and the plenum.) Use the template to mark three hole locations on the mounting surface. Remove the template and drill three 3/32" pilot holes for mounting screws.

Installing the Shielding Baffle

Install the lamp shielding baffle when installing light above a non-UVC resistant component, such as a filter. Adjust the baffle to ensure the component is not subject to direct UVC light. Install the shielding baffle (ordered separately) as shown in figure 6.

IMPORTANT - Shielding baffle must be used in air handler applications where the filter would be exposed to direct UVC light.

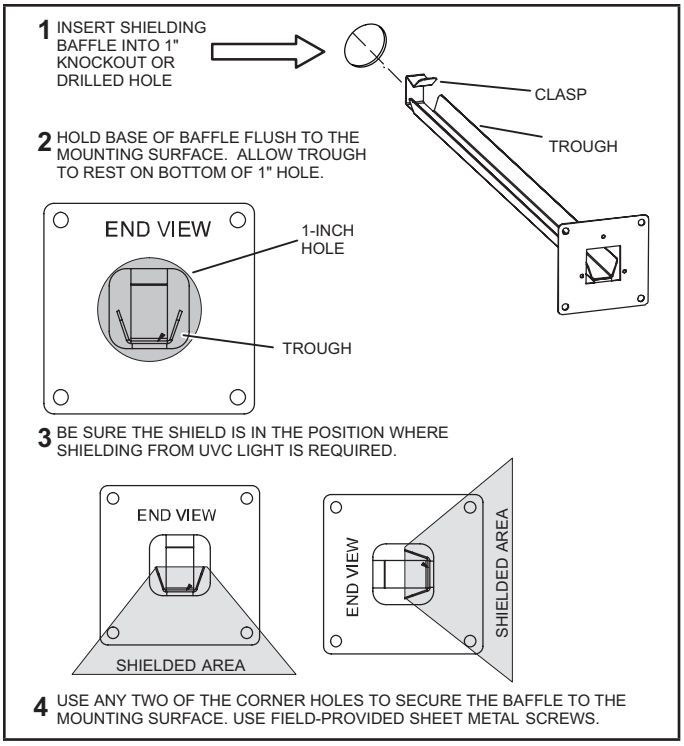

FIGURE 6. Install the Shielding Baffle

Installing the UVC Light

NOTE - If a shielding baffle (Y5171) is required, it must be installed and properly positioned, and the lamp base mounting holes must be located and drilled prior to installation (see figures 5 and 6).

1 - Separate the lamp base from the lamp holder. Place the lamp base on the mounting surface and attach with three provided #6-20 x 1/2" sheet metal screws (see figure 7).

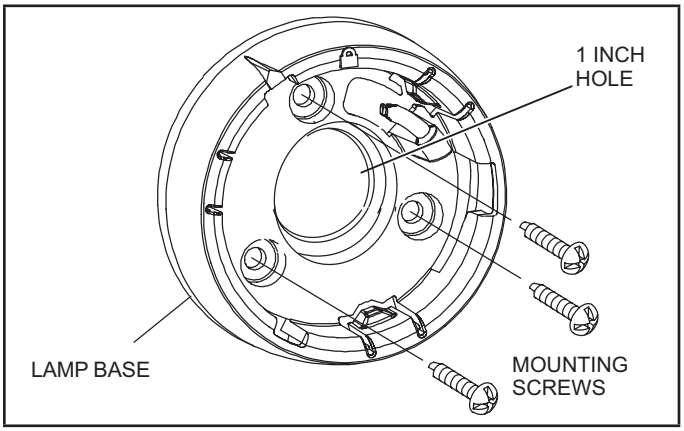

FIGURE 7. Install Lamp Base

⚠ CAUTION

Lamps Contain Mercury.

Ingestion or contact with mercury or mercury vapor is hazardous to your health.

Take care when handling lamps. If lamp is broken, avoid contact with mercury.

NOTICE

Clean lamps prior to installation using a cotton cloth to remove dirt and fingerprints.

Failure to clean lamps could shorten the lamp's life span.

2 - Observing the CAUTION and the NOTICE above, clean the lamp before installing.

3 - Noting the orientation of the pins for lamp insertion, fully insert the lamp into the lamp holder socket so that the o-ring is fully inside the lamp holder (see figure 8).

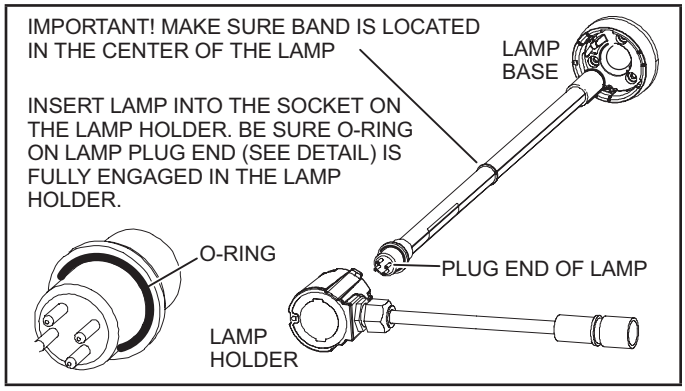

FIGURE 8. Inserting Lamp into Socket

4 - Be careful not to disturb the band in the center of the lamp. Insert the assembled lamp holder into the lamp base. **If lamp shielding baffle is used** – be sure the far end of the lamp rides in the baffle's trough and engages in its clasp (see figure 9).

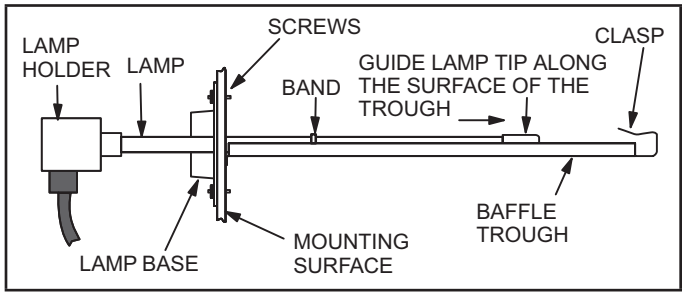

FIGURE 9. Guiding Lamp into Shielding Baffle

5 - Align arrow on lamp holder with arrow on lamp base. Insert lamp holder into base (see A in figure 10).

6 - Twist to align lamp holder arrow with lock symbol (see B in figure 10).

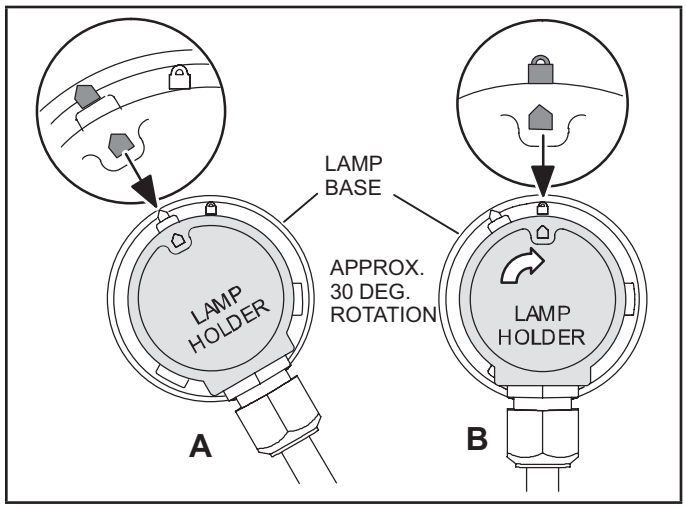

FIGURE 10. Locking Lamp in Place

7 - Connect the lamp holder cord's quick connect to the mating-enhanced ballast connector (see figure 11).

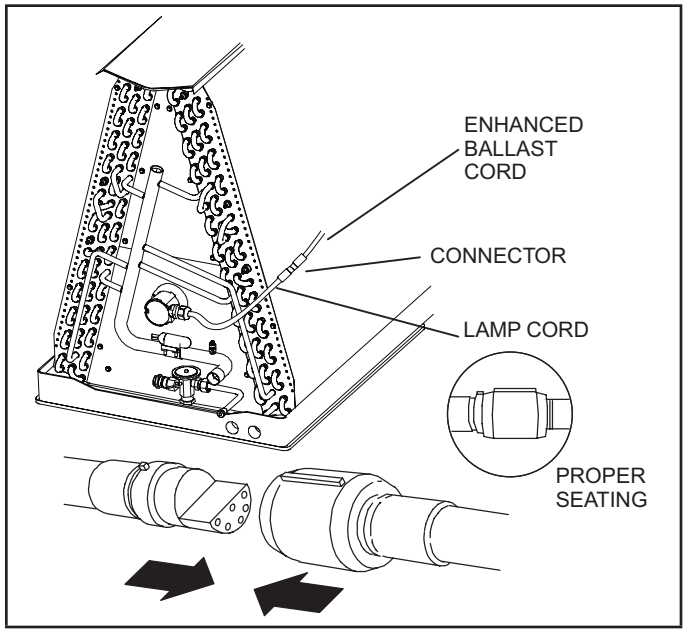

FIGURE 11. Connect Lamp Cord to Enhanced Ballast Cord (Connector)

Power Source

⚠ IMPORTANT

The UVC light must remain ON at all times. It must NOT be connected to a switched power source and must NOT be wired to come on or go off with blower.

Connect Power and Check Operation

On the UVC-41W-S and UVC-41W-D models, connect unswitched 110/230 volt power to the junction box. The junction box should be connected to a maximum 20 amp circuit breaker. If power source is on a circuit breaker greater than 20 amp, include a maximum 20 amp in-line fuse or safety switch / disconnect with maximum 20 amp fuse before the ballast wires are connected to the junction box. From there, 110/230 volt power connects directly to the UVC light's enhanced ballast as described below.

Check VA Capacity – (For UVC-24V Model only). If using the transformer in the air handler, be sure that the transformer has adequate VA capacity to power the 24VA lamp. If the air handler's transformer does not have the VA capacity, install a dedicated transformer with VA capacity to power the light.

Connect the enhanced ballast cord to the 24V step down transformer (see figure 13).

To connect the 24V light to the air handler control, connect the power cord black wire to "R" terminal and the white wire to "C" terminal on the control and the green wire to ground in the cabinet.

Check that Power and Lamp LEDs are operating. Turn off room lights while the UVC germicidal lamp is operating and the access panels are in place. Make sure that blue light is NOT visible through supply or return air grilles, holes in ducts, leaks around access panels, etc. If blue light is visible, either seal leaks around doors or panels or reposition the UVC lamp so that no light is visible. If it is not possible to completely avoid exposure to UVC light, the germicidal light must be removed.

Danger Label Application

Install UVC Danger label (see figure 12) to air handler access panel so it is clearly visible. Install the additional Danger label near location of potential exposure for UVC-41W-D.

⚠ DANGER

Ultraviolet (UVC) Radiation Hazard.

Any exposure will cause significant eye damage and may cause skin damage.

DO NOT look into UVC light source.

Access panels must be in place during appliance operation.

Disconnect power cord from UVC light appliance before servicing the UVC light, the air handling equipment or the duct system.

FIGURE 12. Example of the Danger Label

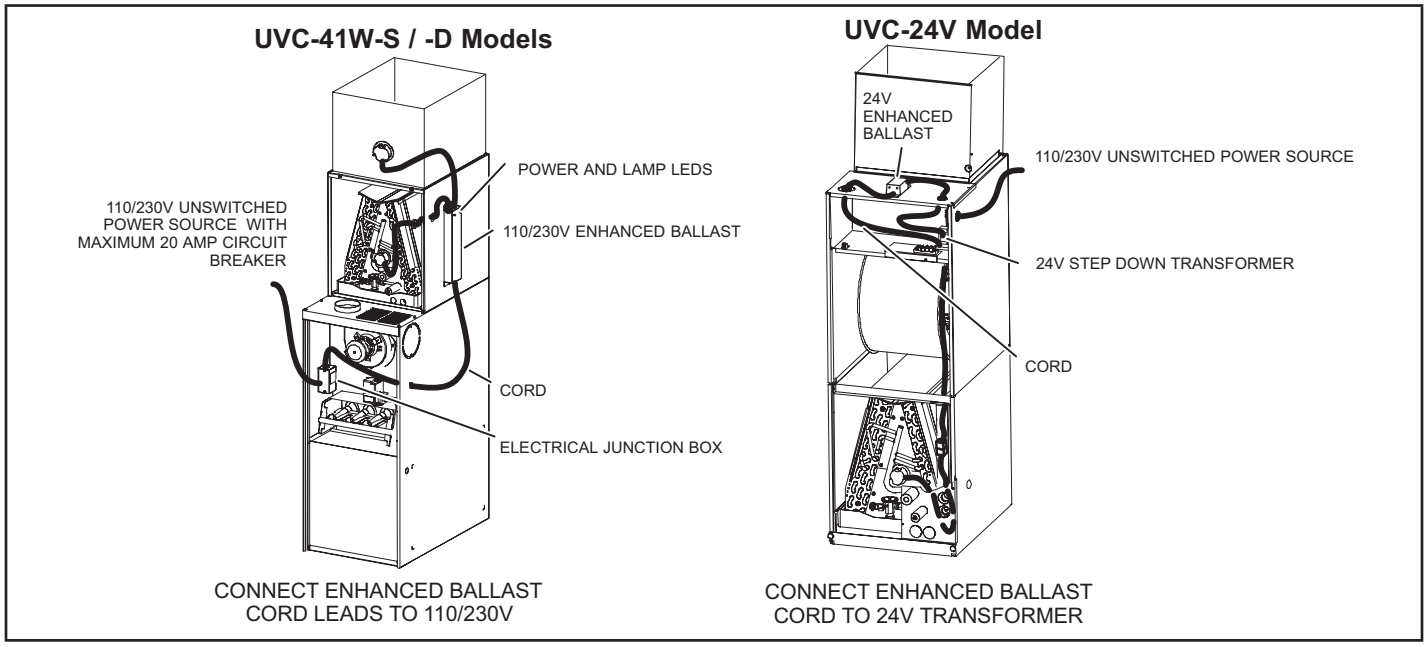

FIGURE 13. Preferred Power Connections

Operation

For optimal performance, continuous operation of the UVC germicidal lamp is recommended.

Maintenance

For all maintenance, contact a qualified HVAC technician.

LED(s) Not Illuminated

Power status LED not lit – Check that the lamp unit is connected to the proper power source.

Lamp status LED(s) not lit –

1 - Check that the lamp holder and the enhanced ballast connectors are properly engaged.

2 - Check that lamp holder is properly engaged in the base.

3 - Check that lamp is properly connected to lamp holder.

4 - Ohm-check across the lamp pins to check for continuity of lamp filaments.

Troubleshooting charts are provided to aid in determining the cause of any problems encountered (figures 14 and 15).

Annual Lamp Replacement

The lamp should be replaced every 12 months, as UVC energy production diminishes over time.

1 - Obtain the correct replacement lamp for your Healthy Climate® germicidal light model.

2 - Disconnect power to the lamp holder by unplugging the connector.

3 - Twist open the lamp holder and carefully withdraw the lamp. Allow lamp to cool 10 minutes before touching.

4 - Wear cotton gloves or use a cotton cloth when handling the new lamp. Remove the old lamp and install the new lamp in the lamp holder.

5 - Carefully insert the assembled lamp and holder.

6 - Twist to close the lamp holder.

7 - Reconnect power to the lamp holder.

8 - Use LED indicator to verify operation.

Lamp Disposal

Hg-LAMP Contains Mercury – Manage in accordance with local, state and federal disposal laws. Refer to www.lamprecycle.org or call 1-800-953-6669.

Lamp Breakage

Wear protective gloves, eye wear and mask.

Sweep the broken glass and debris into a plastic bag, seal the bag, and dispose of properly. Contact your local waste management office for proper disposal.

Do not use a vacuum cleaner. Do not incinerate.

⚠ WARNING

Personal Burn Hazard.

Personal injury may result from hot lamps. During replacement, allow lamp to cool for 10 minutes before removing lamp from fixture.

⚠ DANGER

Ultraviolet (UVC) Radiation Hazard.
Any exposure will cause significant eye damage and may cause skin damage.
DO NOT look into UVC light source.
Access panels must be in place during appliance operation.

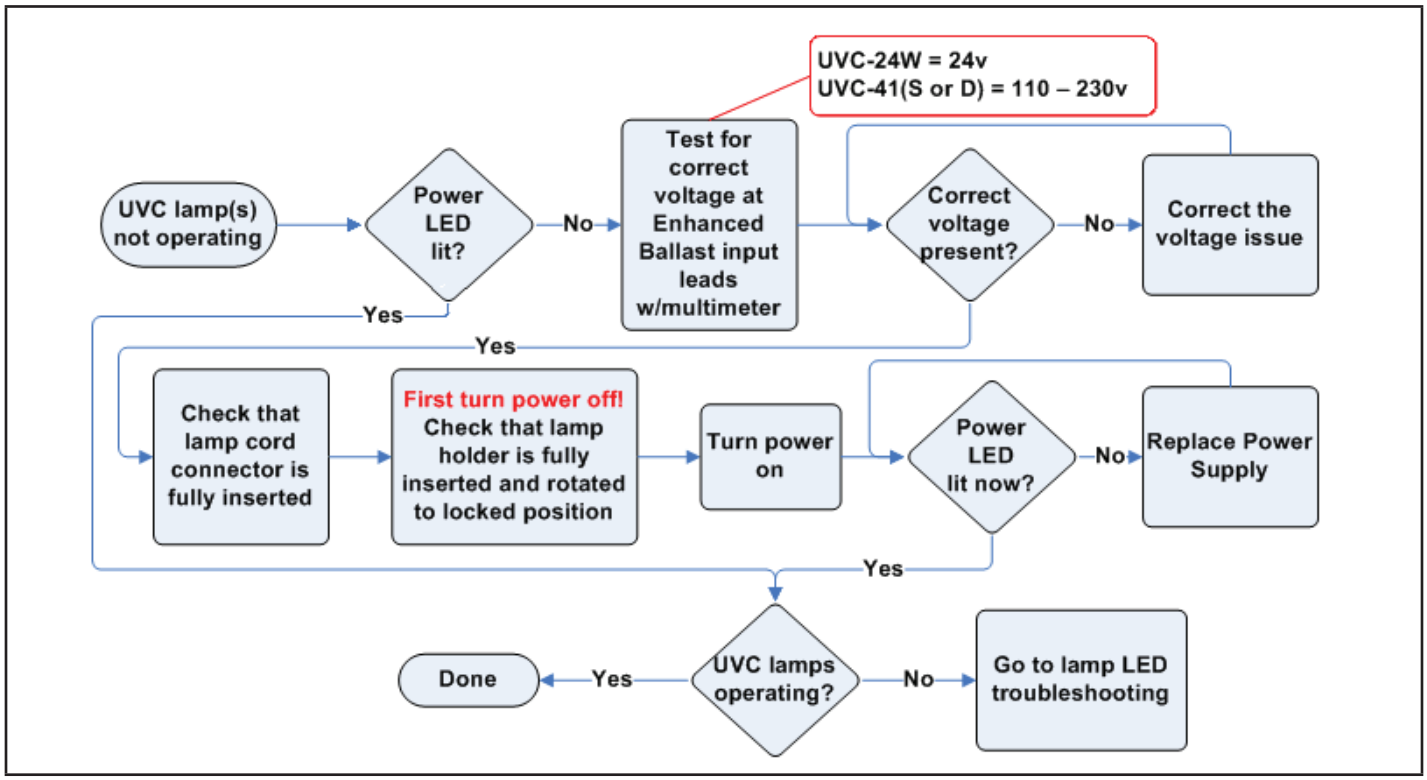

FIGURE 14. UVC Light Troubleshooting – Power

⚠ DANGER

Ultraviolet (UVC) Radiation Hazard.
Any exposure will cause significant eye damage and may cause skin damage.
DO NOT look into UVC light source.
Access panels must be in place during appliance operation.

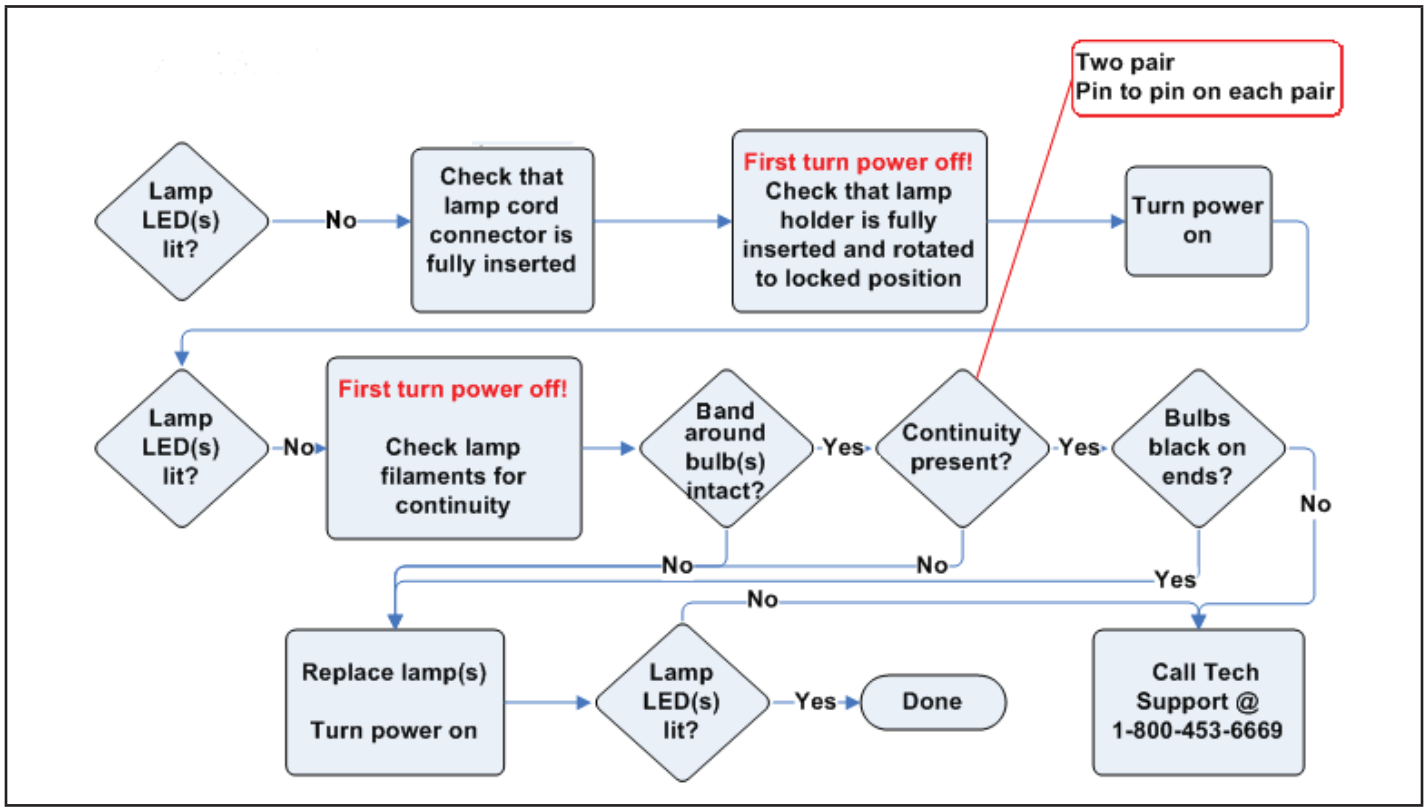

FIGURE 15. UVC Light Troubleshooting – Lamp

PFAS

Checklist for Complete Installation and Safety Items customer copy		
✓	**Installation Procedure or Safety Item**	
	All items were included in the shipping box and have been installed (see Shipping and Packing list).	
	Danger label installed on door to air handling unit (see figure 12).	
	Shielding baffle has been installed to protect filter or other non-UVC resistant components (see figure 6).	
	Additional Danger label installed, if necessary (see figure 12).	
	NOTE - If exposure to the UVC light is possible in any other situation (e.g. when duct panel is removed), you MUST install the additional enclosed Danger label in a visible location near the site where exposure may occur.	
	Turn off room lights while the UVC germicidal lamp is operating and the access panels are in place. Make sure that blue light IS NOT visible through supply or return air grilles, holes in ducts, leaks around access panels, etc.) If blue light is visible, either seal leaks around doors or panels or reposition the UVC lamp so that no light is visible. **If it is not possible to completely avoid exposure to UVC light, device must be removed.**	
	Be sure to have explained to the customer the danger of viewing UVC germicidal light. Make sure the customer understands the possibility of significant eye damage/blindness or serious skin damage. Should the customer detect any blue light from the unit, the customer must know to immediately contact the technician for service and be sure no one goes near enough to the source of the light to look at, or be exposed to the light.	
	Checklist has been filled out and left with homeowner.	
	All instructions and safety instructions have been followed and the checklist is completed.	
	Installation Technician Signature:	
	Date:	
	Customer Signature:	
	Date:	

Cut along line and return bottom copy to dealer

Checklist for Complete Installation and Safety Items dealer copy		
✓	**Installation Procedure or Safety Item**	
	All items were included in the shipping box and have been installed (see Shipping and Packing list).	
	Danger label installed on door to air handling unit (see figure 12).	
	Shielding baffle has been installed to protect filter or other non-UVC resistant components (see figure 6).	
	Additional Danger label installed, if necessary (see figure 12).	
	NOTE - If exposure to the UVC light is possible in any other situation (e.g. when duct panel is removed), you MUST install the additional enclosed Danger label in a visible location near the site where exposure may occur.	
	Turn off room lights while the UVC germicidal lamp is operating and the access panels are in place. Make sure that blue light IS NOT visible through supply or return air grilles, holes in ducts, leaks around access panels, etc.) If blue light is visible, either seal leaks around doors or panels or reposition the UVC lamp so that no light is visible. **If it is not possible to completely avoid exposure to UVC light, device must be removed.**	
	Be sure to have explained to the customer the danger of viewing UVC germicidal light. Make sure the customer understands the possibility of significant eye damage/blindness or serious skin damage. Should the customer detect any blue light from the unit, the customer must know to immediately contact the technician for service and be sure no one goes near enough to the source of the light to look at, or be exposed to the light.	
	Checklist has been filled out and left with homeowner.	
	All instructions and safety instructions have been followed and the checklist is completed.	
	Installation Technician Signature:	
	Date:	
	Customer Signature:	
	Date:	